SCS PROJECT:

# METASHIELD V - TYPICAL DRAWING

## ATTENTION: TECHNICAL REQUIREMENTS FOR THIS PROJECT

| No | DESCRIPTION | REQUIREMENT | RESPONSIBILITY |
|---|---|---|---|
| 1 | WORKS DONE BY OTHERS | ALL DETAILS PERTAINING TO WORK BY OTHERS IS AN ADVISEMENT ONLY AND IT IS THE RESPONSIBILITY OF THE SUPPLIER AND INSTALLER OF THE ITEM/S TO CONFIRM COMPLIANCE TO ITS SUITABILITY FOR THE PURPOSE AND TO CERTIFY ITS COMPLIANCE TO THE REQUIRED FRL TO THE SATISFACTION OF THE FE OR CERTIFIER. | BUILDER, ARCHITECT, OTHER TRADES |
| 2 | SHOP DRAWINGS | APPROVAL OF SHOP DRAWINGS (SIGNITURE AND DATE) IS REQUIRED TO BE RETURNED TO SMOKE CONTROL SYSTEM BEFORE MANUFACTURE CAN COMMENCE. | BUILDER, ARCHITECT |
| 3 | DELIVERIES TO SITE | IF REQD, FORKLIFT TO BE MADE AVAILABLE. | BUILDER |
| 4 | VERTICAL MOVEMENT OF PRODUCT | IF REQD, CRANE SHALL BE AVAILABLE TO SMOKE CONTROL SYSTEMS AT AGREED TIME OF DELIVERY. IF THIS IS NOT AVAILABLE, THIS MAY INCUR EXTRA CHARGES. | BUILDER |
| 5 | STORAGE | SUFFICIENT CLEAR FLOOR SPACE TO BE MADE AVAILABLE IMMEDIATELY ADJACENT TO EACH INSTALLATION LOCATION. | BUILDER |
| 6 | ACCESS TO WORKFACE (INSTALLATION) | REASONABLY ADEQUATE WORKING AREA REQD., MIN 500mm FROM SYSTEM TO STRUCTURE IS IDEAL. SUBJECT TO SITE CONDITIONS. | BUILDER |
| 7 | POSSIBLE OBSTRUCTIONS (WHERE PRESENT) | THERE MUST NOT BE ANYTHING INTERFERING WITH THE OPERATION OF SHUTTER IN ANY WAY. MIN. 100mm FROM SYSTEM TO ANY POSSIBLE OBSTRUCTION TO DROP LINE OF BOTTOM BAR IS IDEAL. | BUILDER |
| 8 | ACCESS PANELS (INSTALATION WITHIN CEILING CAVITY) | 450X450 NOM. ACCESS PANELS TO BE PROVIDED AT THE NOMINATED LOCATION OF SHUTTER CONTROLLER.<br>MAY NOT BE REQD. WHERE REMOVABLE GRID CEILING ALLOWS FOR CLEAR ACCESS TO SHUTTER CONTROLLERS. | BUILDER, CEILING CONTRACTOR |
| 9 | POWER REQUIREMENTS | 240 VOLT 10 AMP GPO OR A 3 PHASE 400V 30A TO BE LOCATED NO MORE THAN 1m AWAY FROM NOMINATED LOCATION OF SHUTTER CONTROLLERS. | BUILDER, ELECTRICAL |
| 10 | ALARM SIGNAL, ACTIVATION | 0 VOLT NORMALLY CLOSED CONTACT (OPEN ON ALARM) TO BE PROVIDED WITHIN 1 METRE OF SHUTTER CONTROLLER. | BUILDER, ELECTRICAL, FIRE |
| 11 | TUNING | ALL SCAFFOLDING & OTHER TRADES TO BE CLEAR 2 DAYS PRIOR TO TUNING & COMMISSIONING. | BUILDER |
| 12 | COMMISSIONING STAGE 1 | PRACTICAL COMPLETION TESTS: PERMANENT POWER & ALARMS CONNECTED FOR DRY RUN PRIOR TO CSC. SHUTTERS MUST BE ISOLATED DURING INDIVIDUAL COMMISSIONING OF OTHER ESSENTIAL SERVICES.<br>*(PRODUCT LOCKED IN OPEN POSITION AFTER TESTING)* | SMOKE CONTROL SYSTEMS & BUILDER |
| 13 | COMMISSIONING STAGE 2 | COORDINATED SERVICES COMMISSIONING (CSC) | SMOKE CONTROL SYSTEMS |
| 14 | COMMISSIONING STAGE 3 | WITNESS TESTING, FINAL COMMISSIONING & HANDOVER | SMOKE CONTROL SYSTEMS |

| SYSTEM | COMPONENT | MATERIALS | FRL | COLOUR/FINISH |
|---|---|---|---|---|
| VERTICAL FIRE SHUTTER METASHIELD | HEAD BOX & BOTTOM BAR | GALVANISED STEEL | -/240/- AS1530.4 | HEAD BOX & BTM. BAR: ALL COMPONENTS COME UNPAINTED |
| | SIDE GUIDES | GALVANISED STEEL | | SIDE GUIDES |
| | LATHES | GALVANISED STEEL | | LATHES |

**PRODUCT SPECIFICATIONS**

## Sheet List Table


| Sheet Number | Sheet Title | REV |
|---|---|---|
| 00 - SPECIFICATIONS | | |
| 0001 | COVER SHEET | C |
| 01 - VERTICAL SHUTTER | | |
| 0101 | 4 HOUR VERTICAL FIRE SHUTTER - METASHIELD | B |
| 02 - DETAILS | | |
| 0201 | DURAGAL ANGLE | B |
| 0202 | SHUTTER SIDE GUIDE | A |
| 0203 | SIDE GUIDE FIXING DETAILS | A |



- THIS DRAWING IS COPYRIGHT AND THE PROPERTY OF THE AUTHOR, AND MUST NOT BE RETAINED, COPIED OR USED WITHOUT THE AUTHORITY OF SMOKE CONTROL SYSTEMS PTY. LTD.
- DO NOT SCALE FROM DRAWING, USE PROVIDED DIMENSIONS ONLY.
- ALL DISCREPENCIES MUST BE BROUGHT TO THE ATTENTION OF AUTHOR.
- SMOKE CONTROL SYSTEMS DO NOT TAKE RESPONSIBILITY OF MEASUREMENTS PROVIDED BY OTHERS.


| REV | CHK | REASON | DATE |
|---|---|---|---|
| A | JR | FOR INFORMATION | 16/03/2023 |
| B | JR | FOR INFORMATION | 31/03/2023 |
| C | JR | FOR INFORMATION | 03/04/2023 |


**DISCLAIMER**

INFORMATION GIVEN IN SMOKECONTROL.COM.AU AND PUBLICATIONS FOR DOWNLOAD ARE GIVEN TO THE BEST OF OUR KNOWLEDGE AND IN GOOD FAITH. SMOKE CONTROL IS NOT RESPONSIBLE IF RECIPIENTS OF TEST REPORTS, ASSESSMENTS OR LITERATURE MISINTERPRET THE CONTENTS AND WRONGLY USE PRODUCTS BASED ON THOSE MISINTERPRETATIONS. NO LIABILITY IS ACCEPTED FOR ERROR OMISSIONS IN THIS WEB SITE OR OUR DOCUMENTS. IN THE INTERESTS OF IMPROVEMENTS AND CONTINUED DEVELOPMENT SMOKE CONTROL RESERVES THE RIGHT TO CHANGE SPECIFICATION WITHOUT NOTICE.

**INFORMATION COPY ONLY**



WWW.SMOKECONTROL.COM.AU
WWW.SMOKECONTROL.CO.NZ
WWW.SMOKECONTROL.COM

AUSTRALIAN HEADOFFICE
PHONE: 1300 665 471
INFO@SMOKECONTROL.COM.AU

NEW ZEALAND
PHONE: 09 300 1980
INFO@SMOKECONTROL.CO.NZ


PROJECT
METASHIELD V
METASHIELD V

CLIENT
---

TITLE
COVER SHEET

SUB SET (CATEGORY)
**00 - SPECIFICATIONS**

DRAWING NUMBER
**METASHIELD V-0001**

| DRAWN BY | ISSUE STATUS: |
|---|---|
| IGOR REBENKO | INFORMATION ONLY |
| START DATE 16/03/2023 | SCALE AS SHOWN @A2 |


FILE: AU20001.dwg --- PLOTTED ON 03/04/2023 BY FARZANA MAHMUD


420mm <<<

<<< 594mm

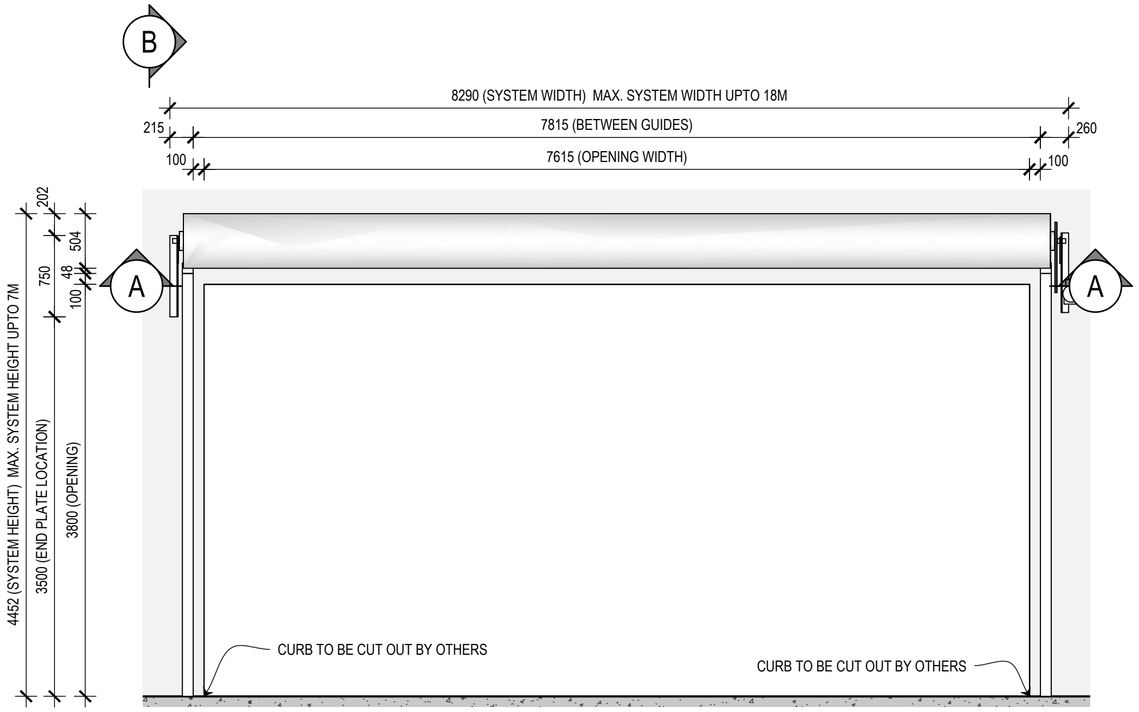


1 FRONT ELEVATION
## 4 HOUR VERTICAL FIRE SHUTTER
SCALE 1:40 @ A2

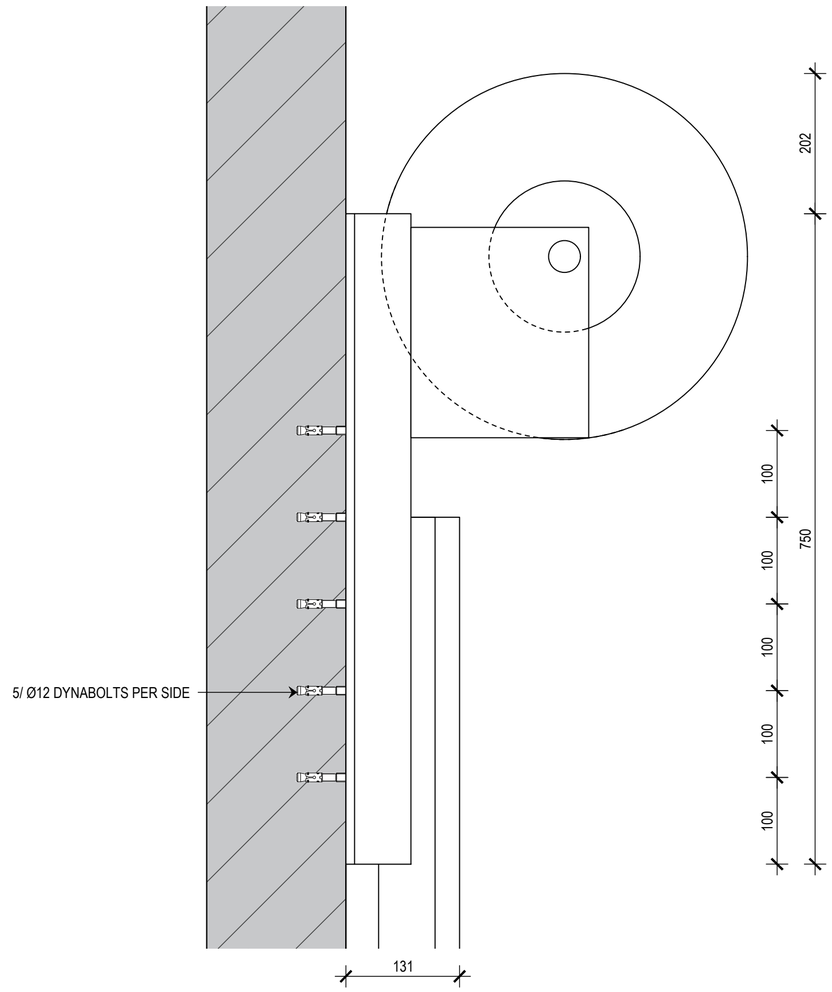


B SIDE ELEVATION
## SECTION
SCALE 1:5 @ A2

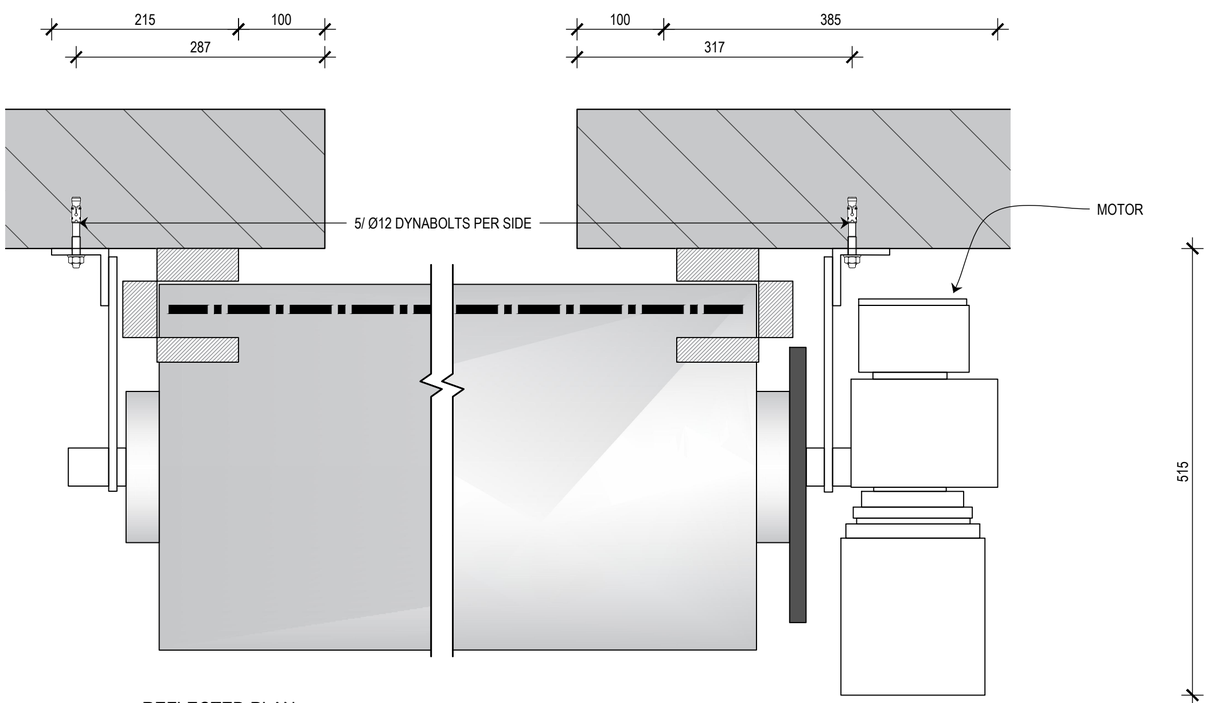


A REFLECTED PLAN
## SECTION
SCALE 1:5 @ A2


- THIS DRAWING IS COPYRIGHT AND THE PROPERTY OF THE AUTHOR, AND MUST NOT BE RETAINED, COPIED OR USED WITHOUT THE AUTHORITY OF SMOKE CONTROL SYSTEMS PTY. LTD.
- DO NOT SCALE FROM DRAWING, USE PROVIDED DIMENSIONS ONLY.
- ALL DISCREPENCIES MUST BE BROUGHT TO THE ATTENTION OF AUTHOR.
- SMOKE CONTROL SYSTEMS DO NOT TAKE RESPONSIBILITY OF MEASUREMENTS PROVIDED BY OTHERS.


| REV | CHK | REASON | DATE |
|---|---|---|---|
| A | JR | FOR INFORMATION | 16/03/2023 |
| B | JR | FOR INFORMATION | 03/04/2023 |


**DISCLAIMER**

INFORMATION GIVEN IN SMOKECONTROL.COM.AU AND PUBLICATIONS FOR DOWNLOAD ARE GIVEN TO THE BEST OF OUR KNOWLEDGE AND IN GOOD FAITH. SMOKE CONTROL IS NOT RESPONSIBLE IF RECIPIENTS OF TEST REPORTS, ASSESSMENTS OR LITERATURE MISINTERPRET THE CONTENTS AND WRONGLY USE PRODUCTS BASED ON THOSE MISINTERPRETATIONS. NO LIABILITY IS ACCEPTED FOR ERROR OMISSIONS IN THIS WEB SITE OR OUR DOCUMENTS. IN THE INTERESTS OF IMPROVEMENTS AND CONTINUED DEVELOPMENT SMOKE CONTROL RESERVES THE RIGHT TO CHANGE SPECIFICATION WITHOUT NOTICE.

**INFORMATION COPY ONLY**



WWW.SMOKECONTROL.COM.AU
WWW.SMOKECONTROL.CO.NZ
WWW.SMOKECONTROL.COM

**AUSTRALIAN HEADOFFICE**
PHONE: 1300 665 471
INFO@SMOKECONTROL.COM.AU

**NEW ZEALAND**
PHONE: 09 300 1980
INFO@SMOKECONTROL.CO.NZ


PROJECT
METASHIELD V
METASHIELD V

CLIENT
---

TITLE
4 HOUR VERTICAL FIRE SHUTTER - METASHIELD

SUB SET (CATEGORY)
**01 - VERTICAL SHUTTER**

DRAWING NUMBER
**METASHIELD V-0101**

| DRAWN BY | ISSUE STATUS: |
|---|---|
| IGOR REBENKO | INFORMATION ONLY |
| START DATE | SCALE |
| 16/03/2023 | AS SHOWN @A2 |


FILE: AU20001.dwg --- PLOTTED ON 03/04/2023 BY FARZANA MAHMUD


420mm >>>
<<< 594mm

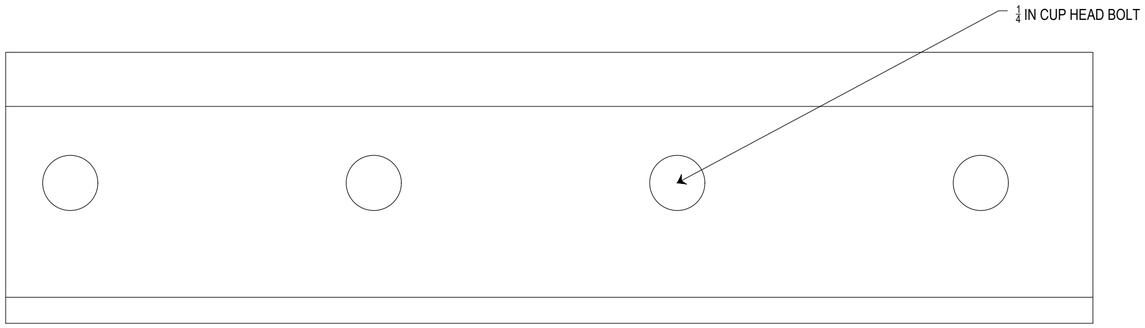


1 FRONT VIEW
DURAGAL ANGLE
SCALE 1:1 @ A2

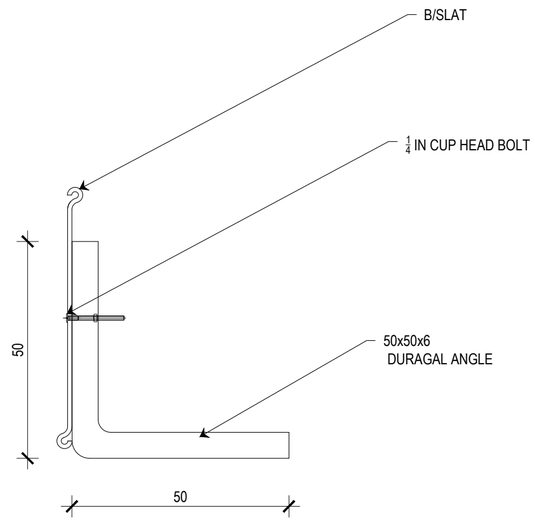


2 SIDE VIEW
DURAGAL ANGLE
SCALE 1:1 @ A2

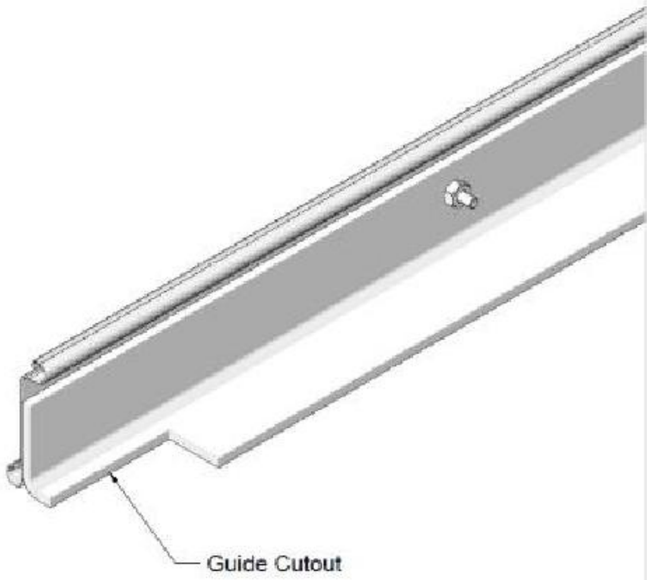


3 3D VIEW
DURAGAL ANGLE
NOT TO SCALE @ A2


- THIS DRAWING IS COPYRIGHT AND THE PROPERTY OF THE AUTHOR, AND MUST NOT BE RETAINED, COPIED OR USED WITHOUT THE AUTHORITY OF SMOKE CONTROL SYSTEMS PTY. LTD.
- DO NOT SCALE FROM DRAWING, USE PROVIDED DIMENSIONS ONLY.
- ALL DISCREPENCIES MUST BE BROUGHT TO THE ATTENTION OF AUTHOR.
- SMOKE CONTROL SYSTEMS DO NOT TAKE RESPONSIBILITY OF MEASUREMENTS PROVIDED BY OTHERS.


| REV | CHK | REASON | DATE |
|---|---|---|---|
| A | JR | FOR INFORMATION | 31/03/2023 |
| B | JR | FOR INFORMATION | 03/04/2023 |

## DISCLAIMER


INFORMATION GIVEN IN SMOKECONTROL.COM.AU AND PUBLICATIONS FOR DOWNLOAD ARE GIVEN TO THE BEST OF OUR KNOWLEDGE AND IN GOOD FAITH. SMOKE CONTROL IS NOT RESPONSIBLE IF RECIPIENTS OF TEST REPORTS, ASSESSMENTS OR LITERATURE MISINTERPRET THE CONTENTS AND WRONGLY USE PRODUCTS BASED ON THOSE MISINTERPRETATIONS. NO LIABILITY IS ACCEPTED FOR ERROR OMISSIONS IN THIS WEB SITE OR OUR DOCUMENTS. IN THE INTERESTS OF IMPROVEMENTS AND CONTINUED DEVELOPMENT SMOKE CONTROL RESERVES THE RIGHT TO CHANGE SPECIFICATION WITHOUT NOTICE.


**INFORMATION COPY ONLY**


WWW.SMOKECONTROL.COM.AU
WWW.SMOKECONTROL.CO.NZ
WWW.SMOKECONTROL.COM

**AUSTRALIAN HEADOFFICE**
PHONE: 1300 665 471
INFO@SMOKECONTROL.COM.AU

**NEW ZEALAND**
PHONE: 09 300 1980
INFO@SMOKECONTROL.CO.NZ


PROJECT
METASHIELD V
METASHIELD V

CLIENT
---

TITLE
DURAGAL ANGLE

SUB SET (CATEGORY)
**02 - DETAILS**

DRAWING NUMBER
**METASHIELD V-0201**

| DRAWN BY | ISSUE STATUS: |
|---|---|
| FARZANA MAHMUD | INFORMATION ONLY |
| START DATE | SCALE |
| 16/03/2023 | AS SHOWN @A2 |


FILE: AU20001.dwg --- PLOTTED ON 03/04/2023 BY FARZANA MAHMUD


<<< 420mm
<<< 594mm

TOP VIEW
## 2 SHUTTER SIDE GUIDE
SCALE 1:4 @ A2

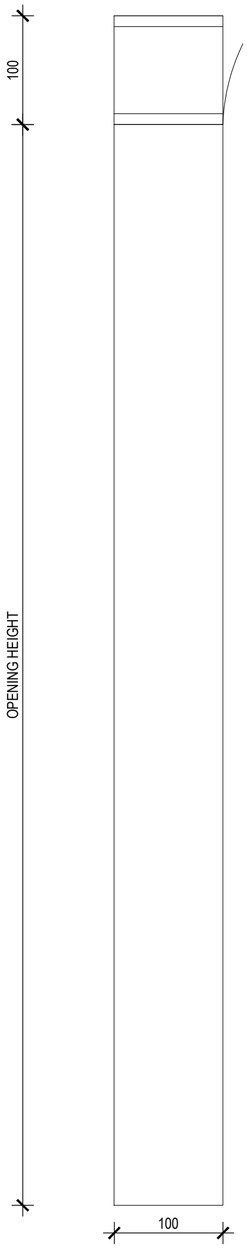


FRONT VIEW
## 1 SHUTTER SIDE GUIDE
SCALE 1:4 @ A2

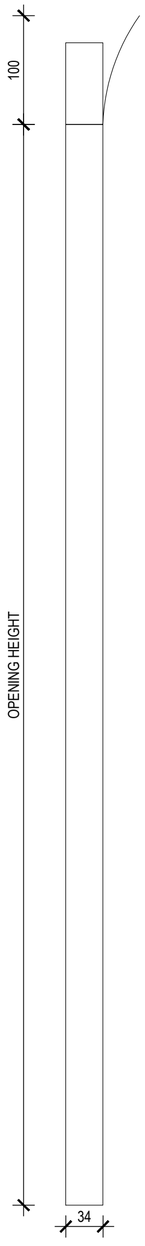


SIDE VIEW
## 3 SHUTTER SIDE GUIDE
SCALE 1:4 @ A2

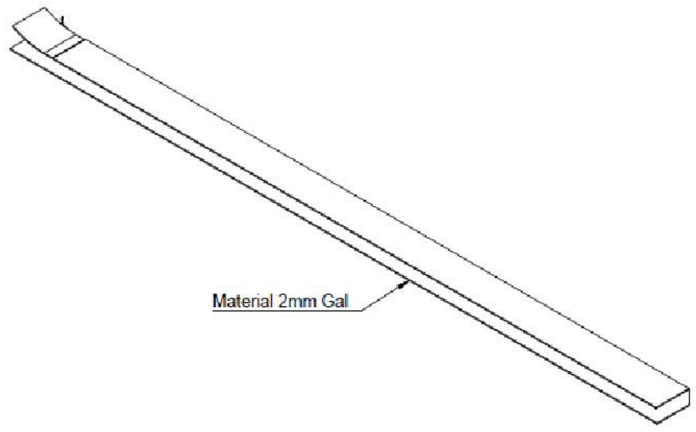


3D VIEW
## 4 SHUTTER
SCALE 1:10 @ A2


- THIS DRAWING IS COPYRIGHT AND THE PROPERTY OF THE AUTHOR, AND MUST NOT BE RETAINED, COPIED OR USED WITHOUT THE AUTHORITY OF SMOKE CONTROL SYSTEMS PTY. LTD.
- DO NOT SCALE FROM DRAWING, USE PROVIDED DIMENSIONS ONLY.
- ALL DISCREPENCIES MUST BE BROUGHT TO THE ATTENTION OF AUTHOR.
- SMOKE CONTROL SYSTEMS DO NOT TAKE RESPONSIBILITY OF MEASUREMENTS PROVIDED BY OTHERS.


| REV | CHK | REASON | DATE |
|---|---|---|---|
| A | JR | FOR INFORMATION | 31/03/2023 |


**DISCLAIMER**

INFORMATION GIVEN IN SMOKECONTROL.COM.AU AND PUBLICATIONS FOR DOWNLOAD ARE GIVEN TO THE BEST OF OUR KNOWLEDGE AND IN GOOD FAITH. SMOKE CONTROL IS NOT RESPONSIBLE IF RECIPIENTS OF TEST REPORTS, ASSESSMENTS OR LITERATURE MISINTERPRET THE CONTENTS AND WRONGLY USE PRODUCTS BASED ON THOSE MISINTERPRETATIONS. NO LIABILITY IS ACCEPTED FOR ERROR OMISSIONS IN THIS WEB SITE OR OUR DOCUMENTS. IN THE INTERESTS OF IMPROVEMENTS AND CONTINUED DEVELOPMENT SMOKE CONTROL RESERVES THE RIGHT TO CHANGE SPECIFICATION WITHOUT NOTICE.


**INFORMATION COPY ONLY**


WWW.SMOKECONTROL.COM.AU
WWW.SMOKECONTROL.CO.NZ
WWW.SMOKECONTROL.COM

**AUSTRALIAN HEADOFFICE**
PHONE: 1300 665 471
INFO@SMOKECONTROL.COM.AU

**NEW ZEALAND**
PHONE: 09 300 1980
INFO@SMOKECONTROL.CO.NZ


PROJECT
METASHIELD V
METASHIELD V

CLIENT
---

TITLE
SHUTTER SIDE GUIDE

SUB SET (CATEGORY)
**02 - DETAILS**

DRAWING NUMBER
**METASHIELD V-0202**

| DRAWN BY | ISSUE STATUS: |
|---|---|
| FARZANA MAHMUD | INFORMATION ONLY |
| START DATE | SCALE |
| 16/03/2023 | AS SHOWN @A2 |


FILE: AU20001.dwg --- PLOTTED ON 03/04/2023 BY FARZANA MAHMUD
420mm >>>
<<< 594mm

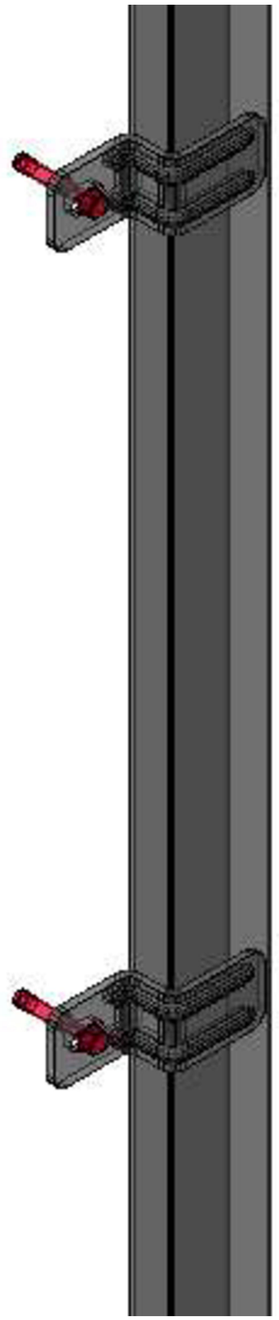

1 3D VIEW
SIDE GUIDE FIXING DETAILS
NOT TO SCALE @ A2

2 FRONT VIEW
SIDE GUIDE FIXING DETAILS
NOT TO SCALE @ A2

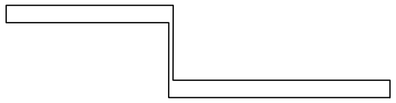

3 TOP VIEW
SIDE GUIDE FIXING DETAILS
NOT TO SCALE @ A2


- THIS DRAWING IS COPYRIGHT AND THE PROPERTY OF THE AUTHOR, AND MUST NOT BE RETAINED, COPIED OR USED WITHOUT THE AUTHORITY OF SMOKE CONTROL SYSTEMS PTY. LTD.
- DO NOT SCALE FROM DRAWING, USE PROVIDED DIMENSIONS ONLY.
- ALL DISCREPENCIES MUST BE BROUGHT TO THE ATTENTION OF AUTHOR.
- SMOKE CONTROL SYSTEMS DO NOT TAKE RESPONSIBILITY OF MEASUREMENTS PROVIDED BY OTHERS.


| REV | CHK | REASON | DATE |
|---|---|---|---|
| A | JR | FOR INFORMATION | 31/03/2023 |

## DISCLAIMER

INFORMATION GIVEN IN SMOKECONTROL.COM.AU AND PUBLICATIONS FOR DOWNLOAD ARE GIVEN TO THE BEST OF OUR KNOWLEDGE AND IN GOOD FAITH. SMOKE CONTROL IS NOT RESPONSIBLE IF RECIPIENTS OF TEST REPORTS, ASSESSMENTS OR LITERATURE MISINTERPRET THE CONTENTS AND WRONGLY USE PRODUCTS BASED ON THOSE MISINTERPRETATIONS. NO LIABILITY IS ACCEPTED FOR ERROR OMISSIONS IN THIS WEB SITE OR OUR DOCUMENTS. IN THE INTERESTS OF IMPROVEMENTS AND CONTINUED DEVELOPMENT SMOKE CONTROL RESERVES THE RIGHT TO CHANGE SPECIFICATION WITHOUT NOTICE.

**INFORMATION COPY ONLY**


WWW.SMOKECONTROL.COM.AU
WWW.SMOKECONTROL.CO.NZ
WWW.SMOKECONTROL.COM

**AUSTRALIAN HEADOFFICE**
PHONE: 1300 665 471
INFO@SMOKECONTROL.COM.AU

**NEW ZEALAND**
PHONE: 09 300 1980
INFO@SMOKECONTROL.CO.NZ


PROJECT
METASHIELD V
METASHIELD V

CLIENT
---

TITLE
SIDE GUIDE FIXING DETAILS

SUB SET (CATEGORY)
**02 - DETAILS**

DRAWING NUMBER
**METASHIELD V-0203**

| DRAWN BY | ISSUE STATUS: |
|---|---|
| FARZANA MAHMUD | INFORMATION ONLY |
| START DATE 16/03/2023 | SCALE AS SHOWN @A2 |


FILE: AU20001.dwg --- PLOTTED ON 03/04/2023 BY FARZANA MAHMUD


<<< 420mm
<<< 594mm